FIBOX
Enclosing innovations

MNX PC 125/100 HG

Sample photo

Order symbol:	PC 125/100 HG	**EAN**:	6418074022110
Product nbr:	6011309	**El. number**:	
Description:	Enclosure, PC	Finland:	3420333
Remarks:	Grey cover	Electric No. Denmark:	8212022108
		Electric No. Italy:	7351060
		Electric No. Sweden:	2535533

Including: Base with TPE gasket, screws for mounting plate/DIN-rail and cover with polyamide cover screws.

Dimensions:	Length	Width	Height
mm:	130	130	100
inch:	5.1	5.1	3.9

Materials:

Material:	Polycarbonate
Base colour:	RAL 7035 -light grey
Cover screws material:	Polyamide
Cover colour:	RAL 7035 -light grey
Cover screws colour:	Grey
Gasket material:	TPE

Temperatures:

Temperature °C (short term):	-40 … 120 °C
Temperature °C (continuous):	-40 … 80 °C
Temperature °F (short term):	-40 … 250 °F
Temperature °F (continuous):	-40 … 175 °F

Accessories:

MIV 125	Mounting plate (Galvanized steel)

Accessories:

MIN 10	DIN-15 Mounting rail
MIV 10	DIN-35 Mounting rail
FP A 125/130	Front plate (Aluminium)
HFP 130	Front plate hinge series
FP 22046	Wall fastening lug (4 pcs)

Rating:

Ingress Protection (EN 60529): IP66/IP67
Impact Resistance (EN 62262): IK08
Electrical insulation: Totally insulated
Halogen free (DIN/VDE 0472, Part 815): 1
UV resistance: UL 508
Flammability Rating: UL 746C 5"
Glow Wire Test (IEC 695-2-1) °C: 960
NEMA Class: NEMA 1, 4, 4X, 6

Certificates:

SGS Fimko
Gost R

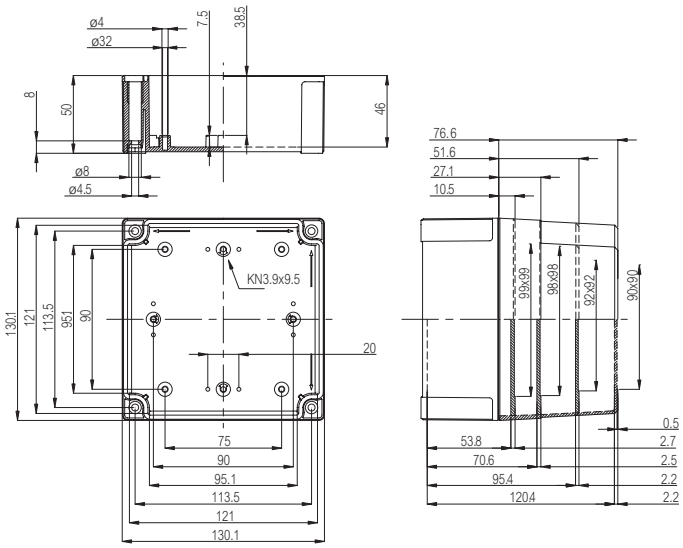

© Fibox Oy, Data subject to change without notice (printed: 1.2.2019)